Metal Earth®
Premium Series

360° view

It is highly recommended that you visit
www.metalearth.com/360/icx133
to see the completed model before assembling your own

STAR WARS™
www.starwars.com
© & ™ Lucasfilm Ltd.

Go to www.metalearth.com/360/icx133 to see the zoomable PDF version of this instruction sheet

ICX133 DARTH VADER

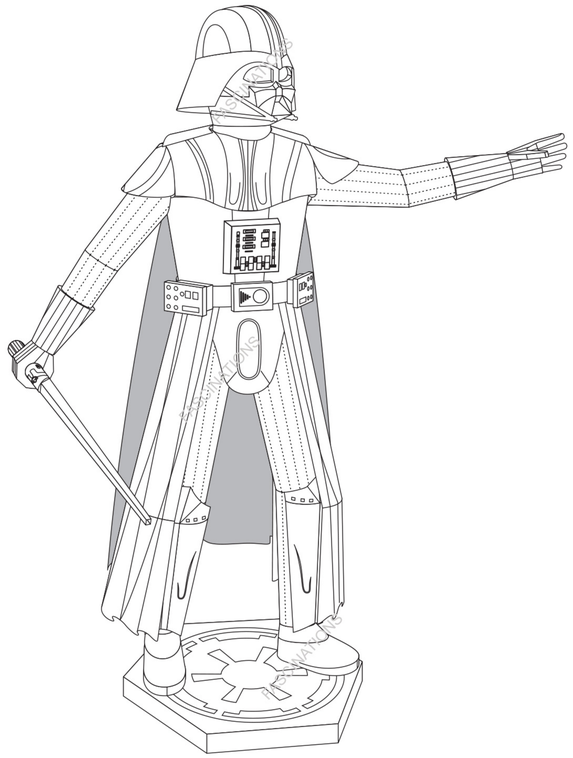

TO CREATE THE BEST CONNECTIONS

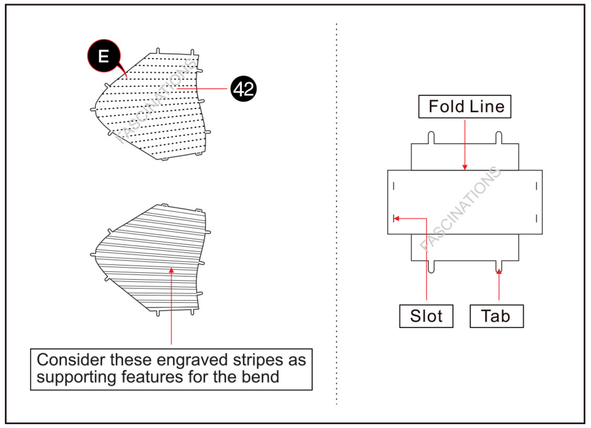

Legends:

- E — Engraved/Color side
- NE — Non-engraved/Silver side
- Attention point
- Insert tab and bend 90 degrees
- Insert tab and twist 90 degrees

Assembly tip:

If needed, slightly twist tabs to hold parts together then untwist and bend them down for a nice finish

Recommended tools:

-Wire cutters: helpful for taking parts from the metal sheets.

-Tweezers or needle nose pliers: helpful for folding parts, bending and twisting tabs.

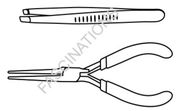

METAL SHEETS

A

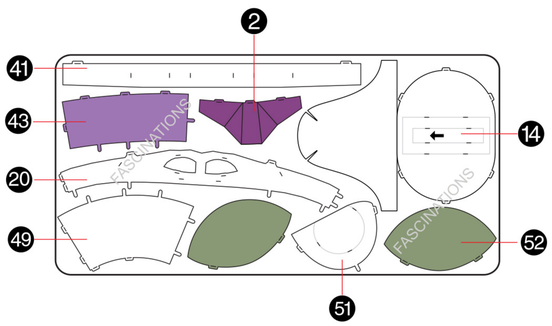

B

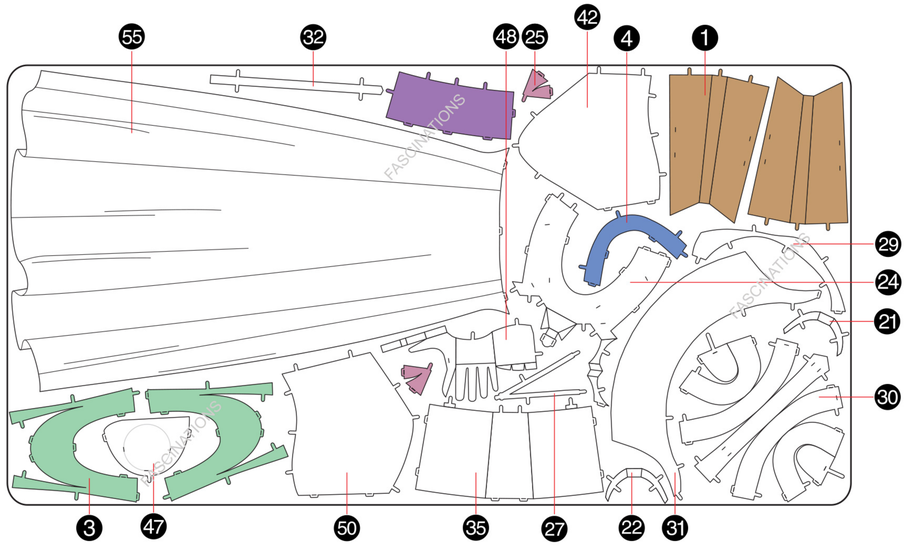

C

D

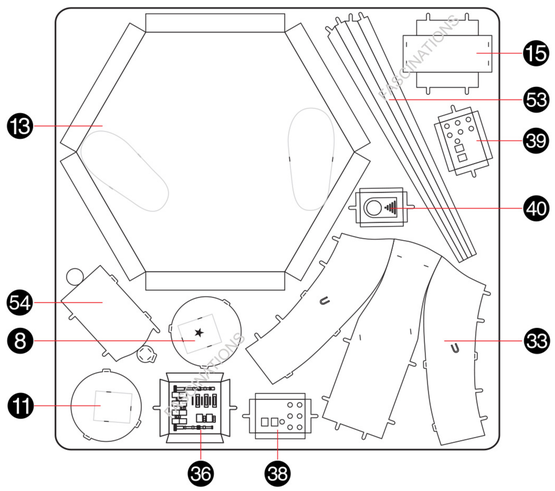

In order to avoid possible injury from sharp edges, please carefully discard the metal sheets after parts have been removed.

ASSEMBLY STEPS

Step 1

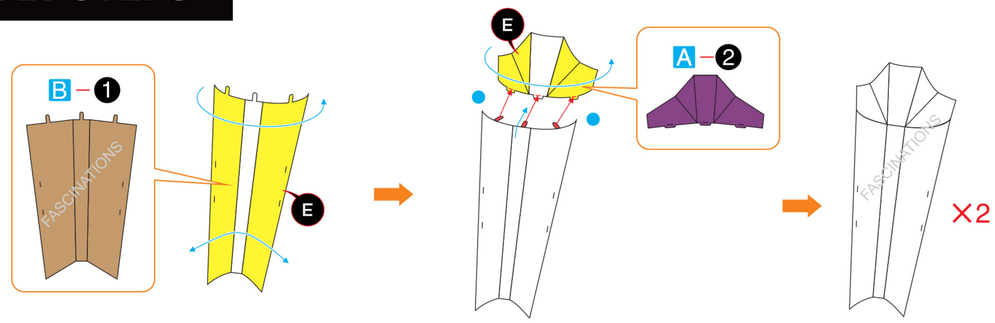

Step 2

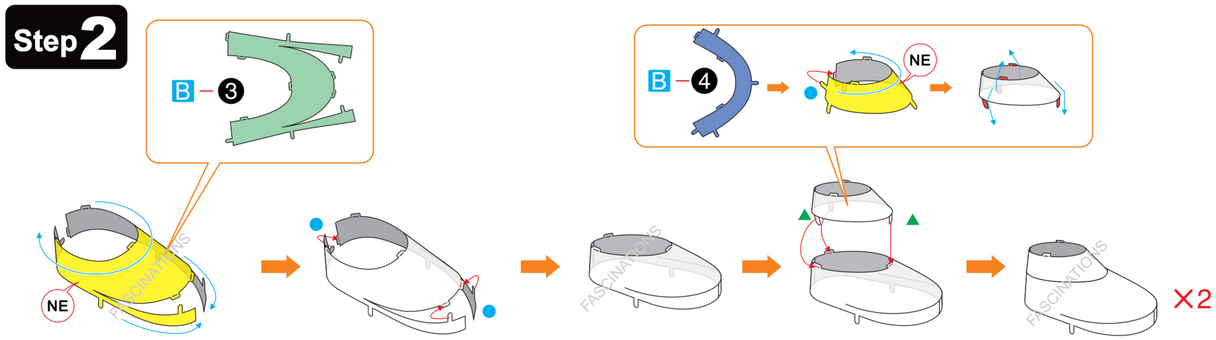

Step 3

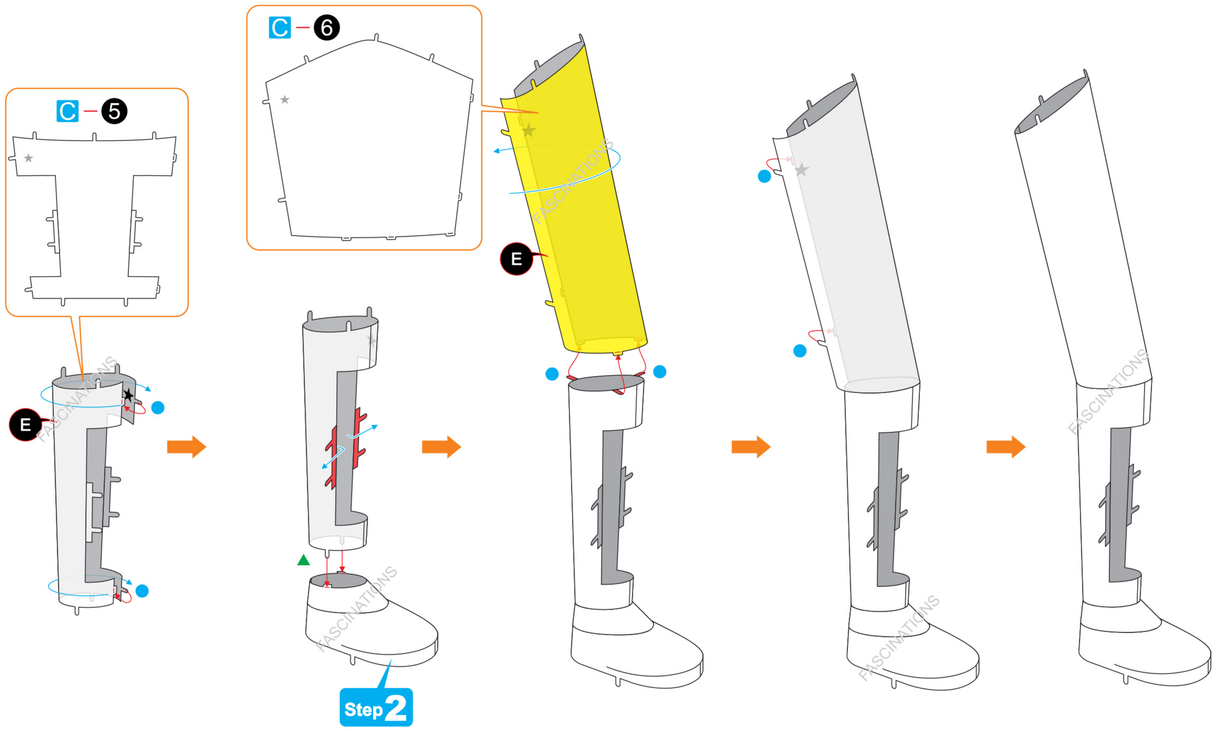

Step 4

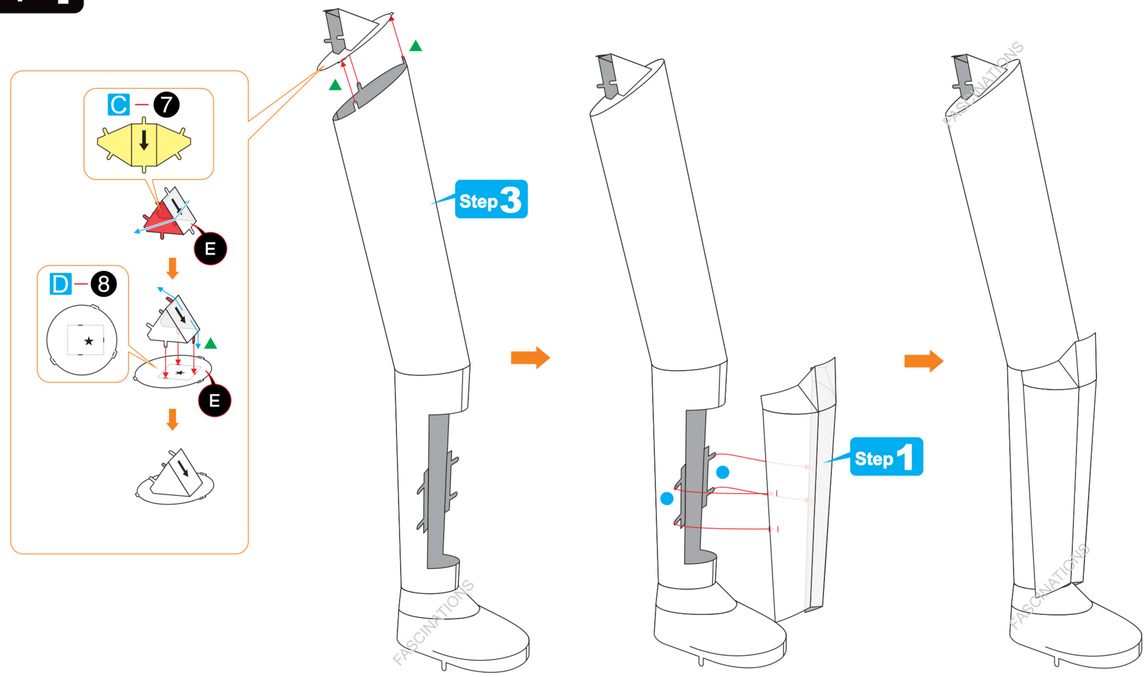

Step 5

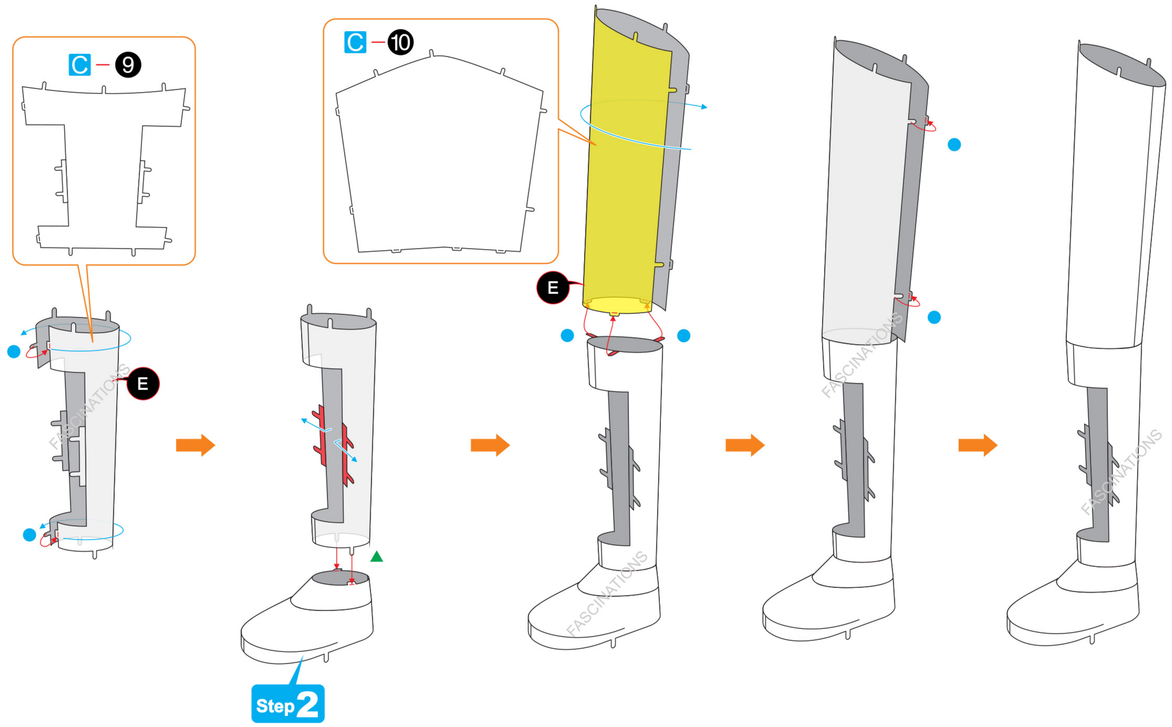

Step 6

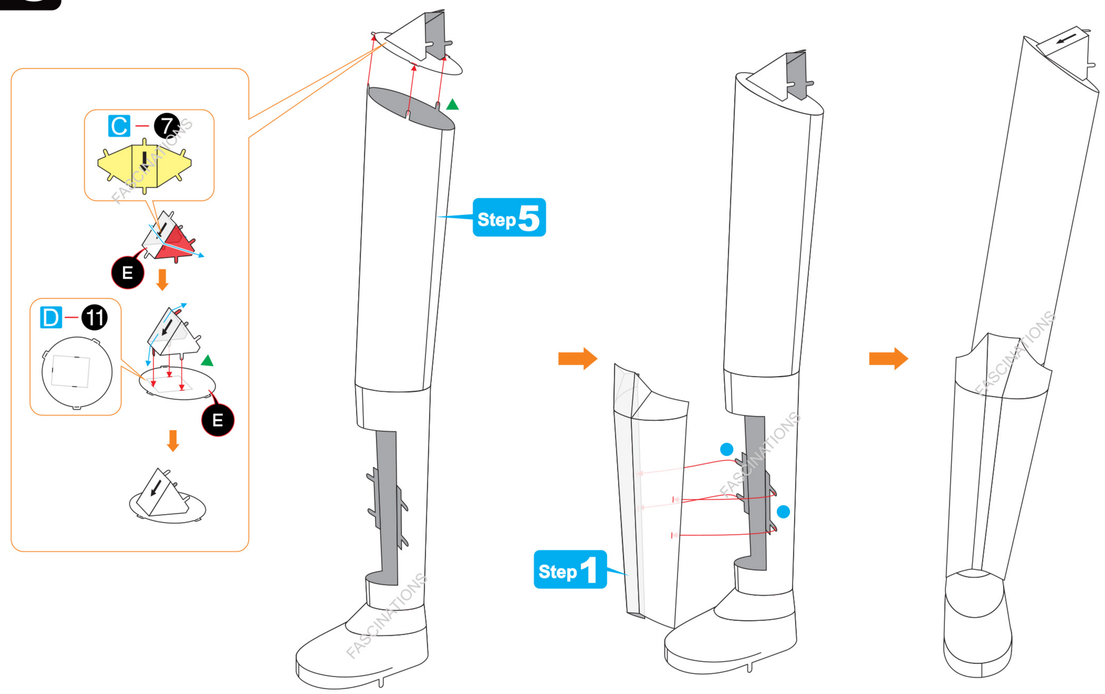

Step 7

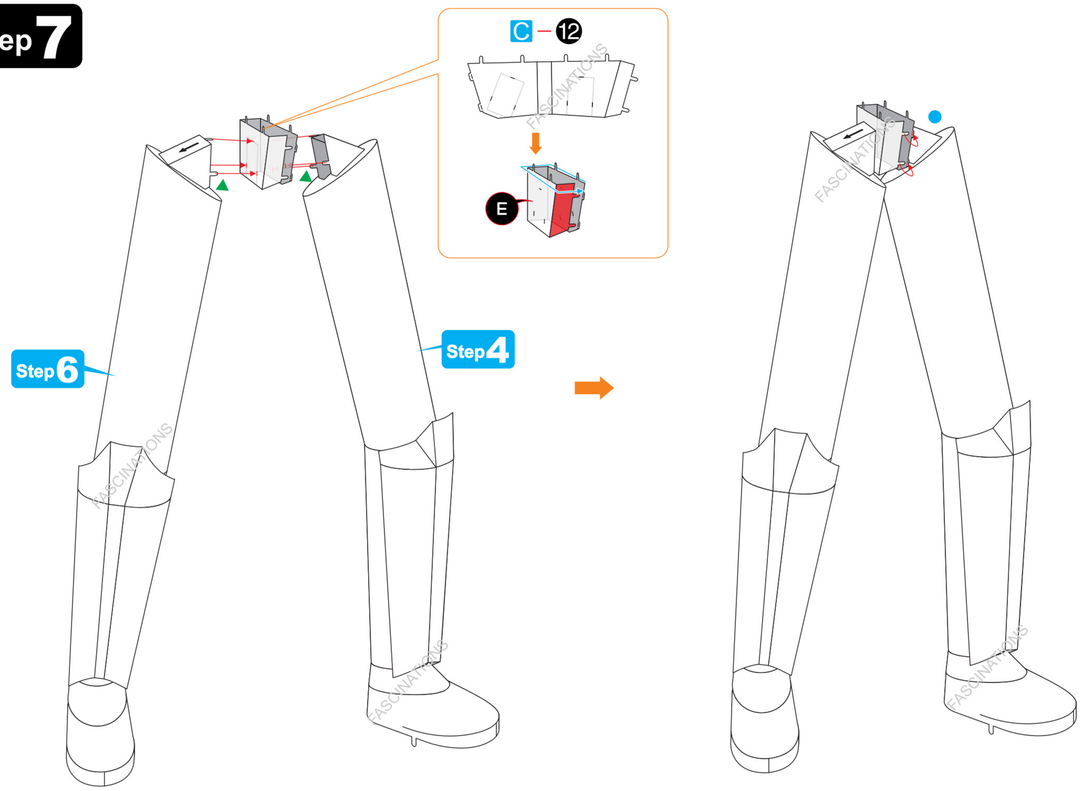

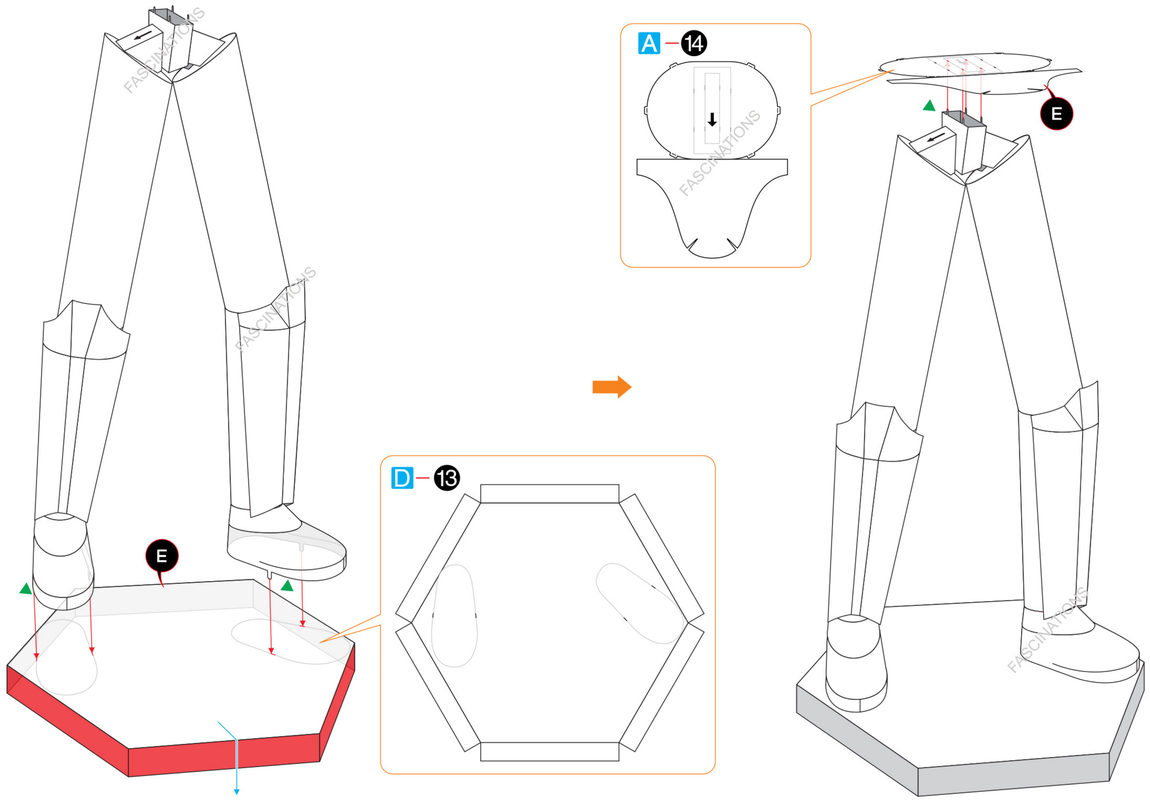

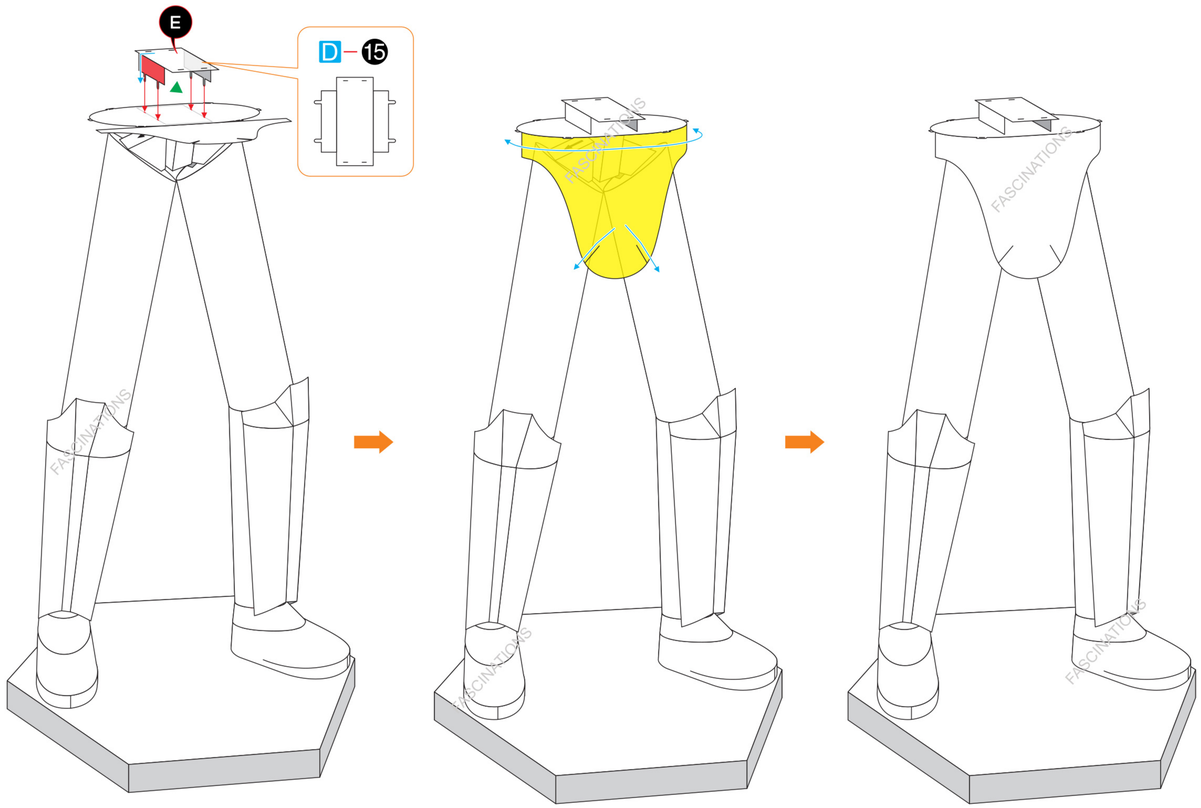

Step 8

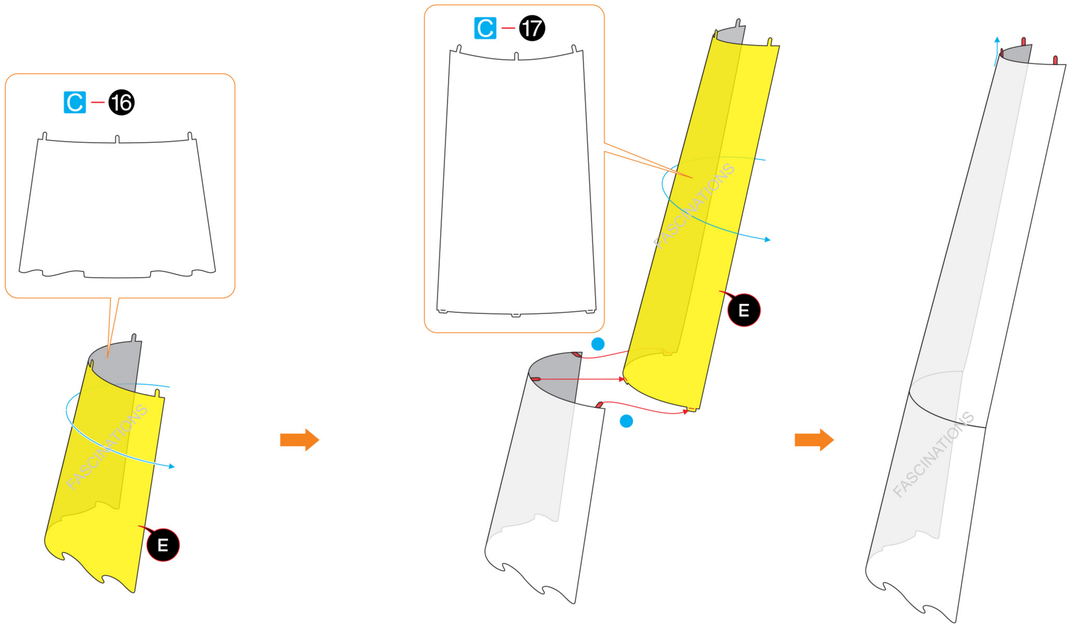

Step 9

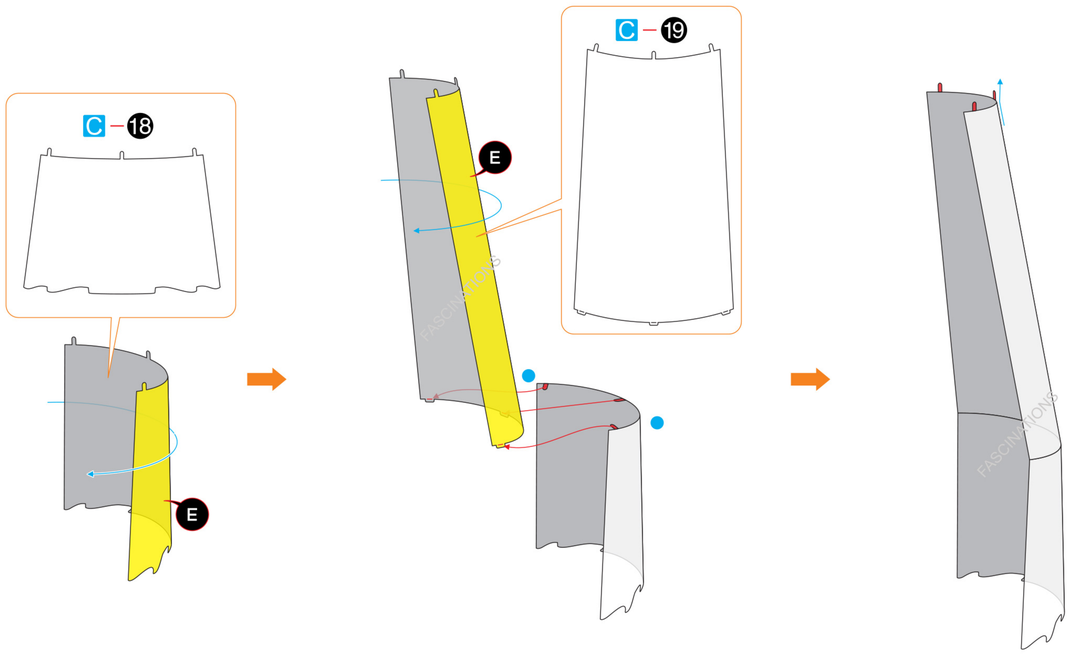

Step 10

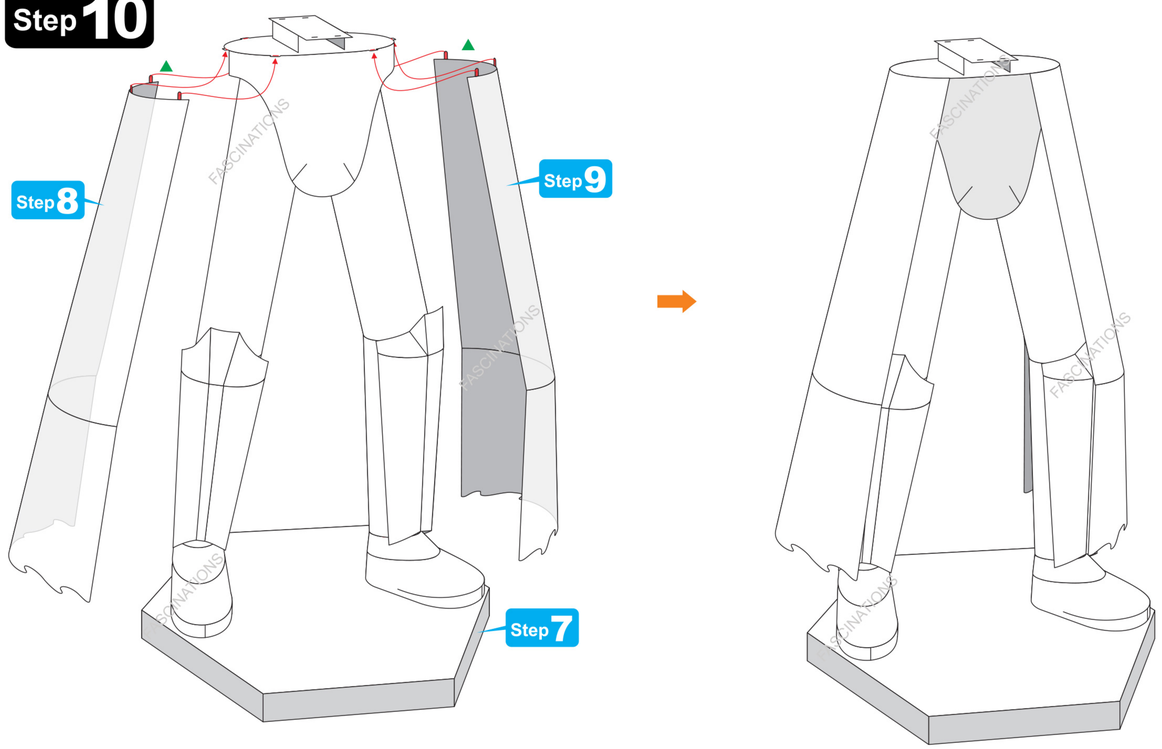

Step 11

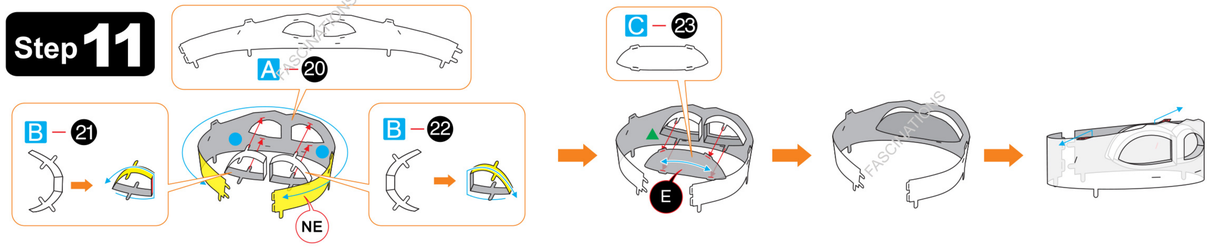

Step 12

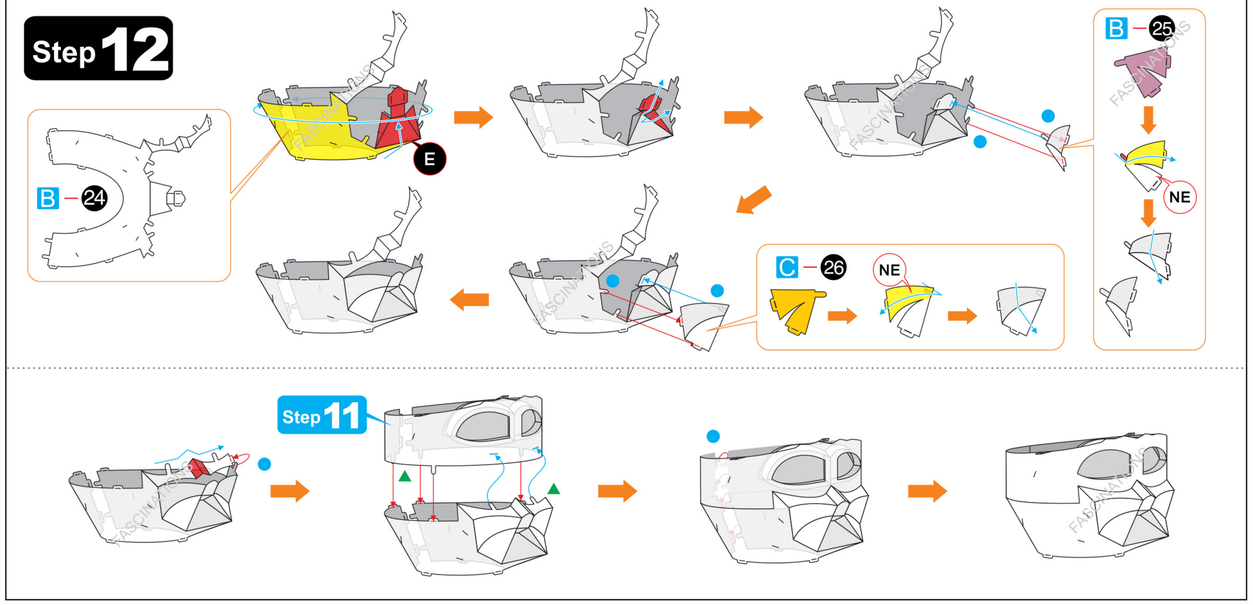

Step 13

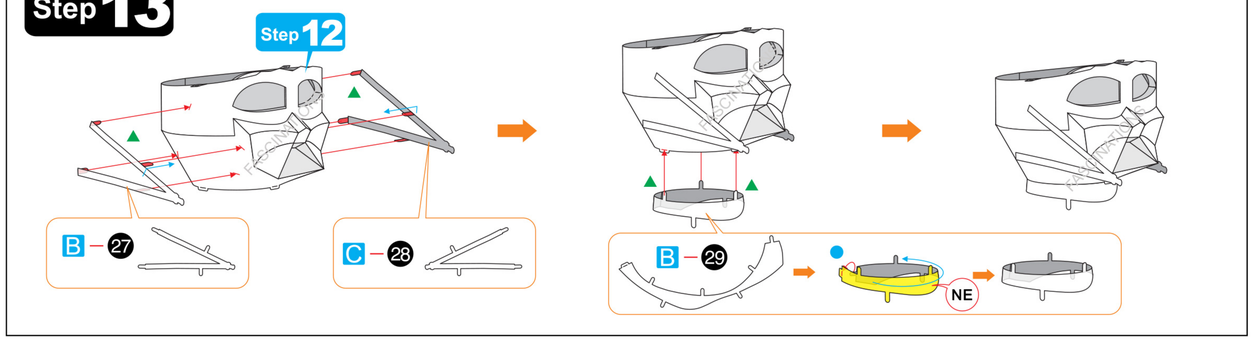

Step 14

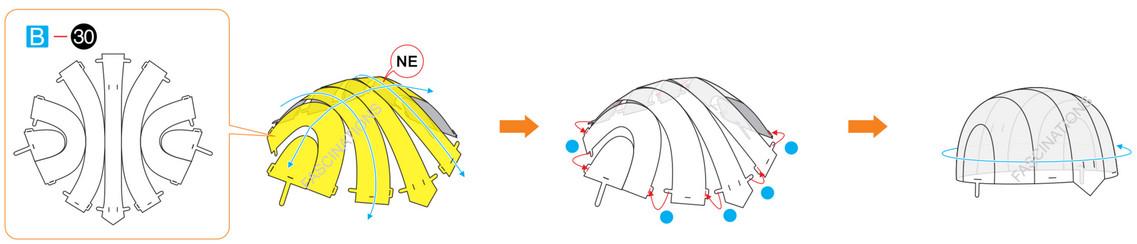

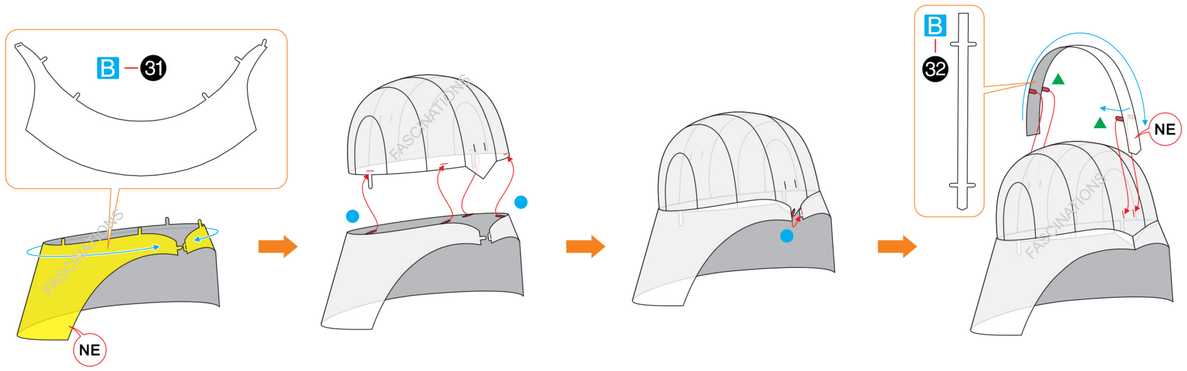

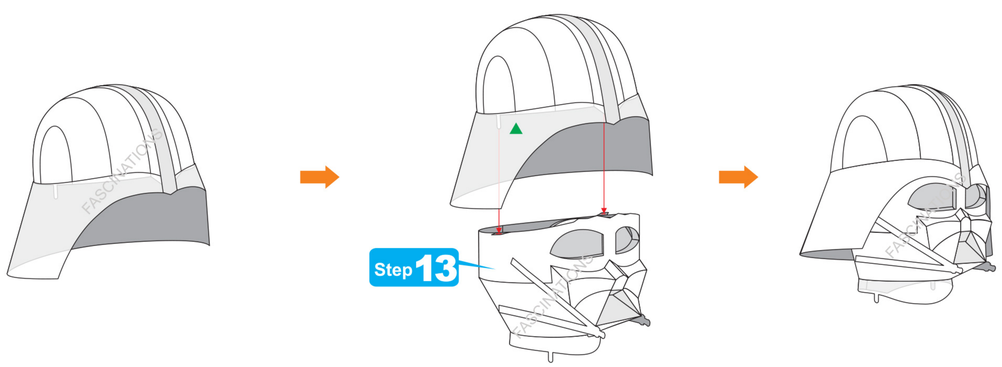

Step 15

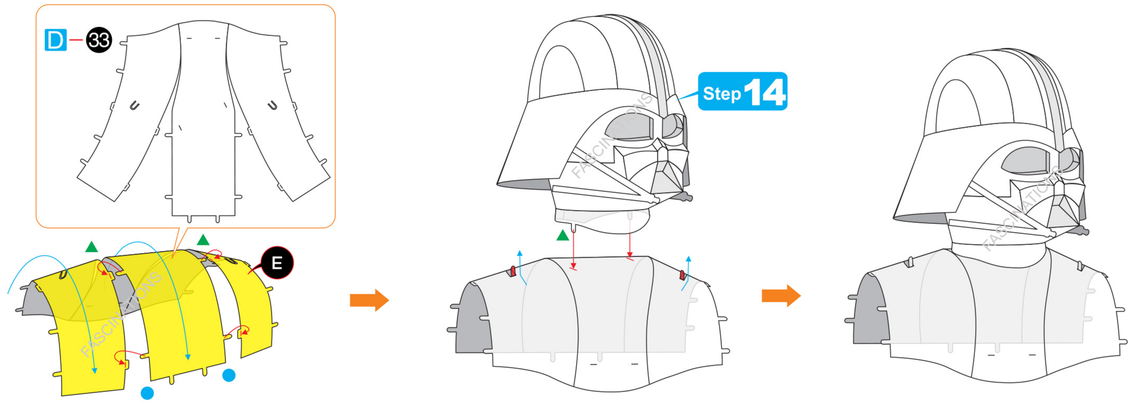

Step 16

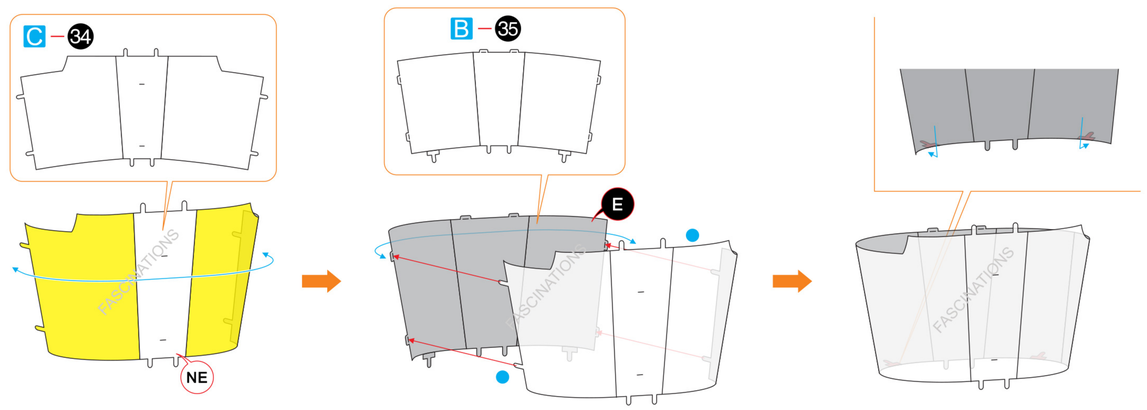

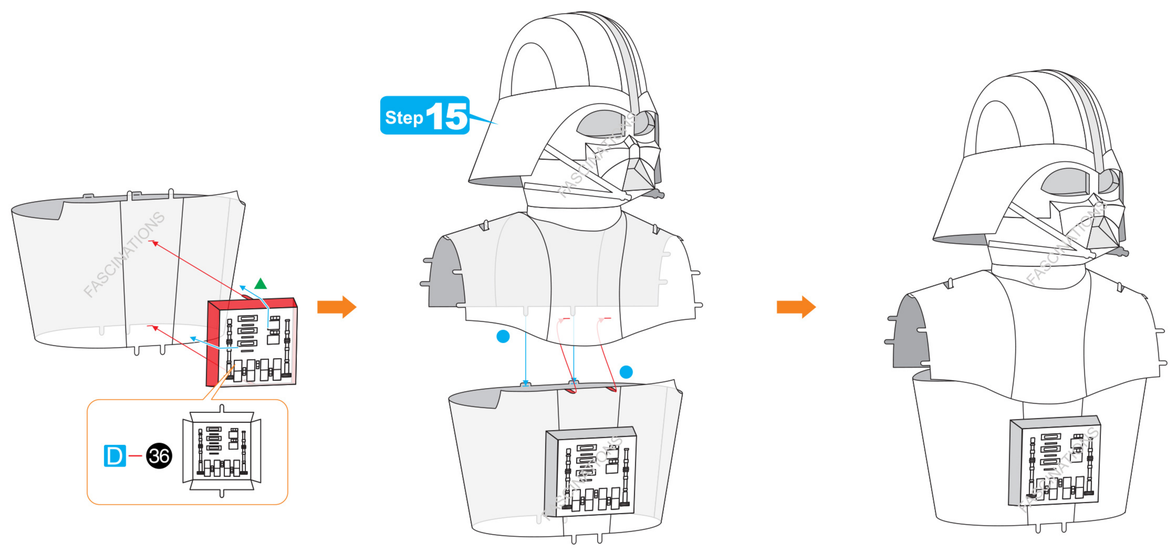

Step 17

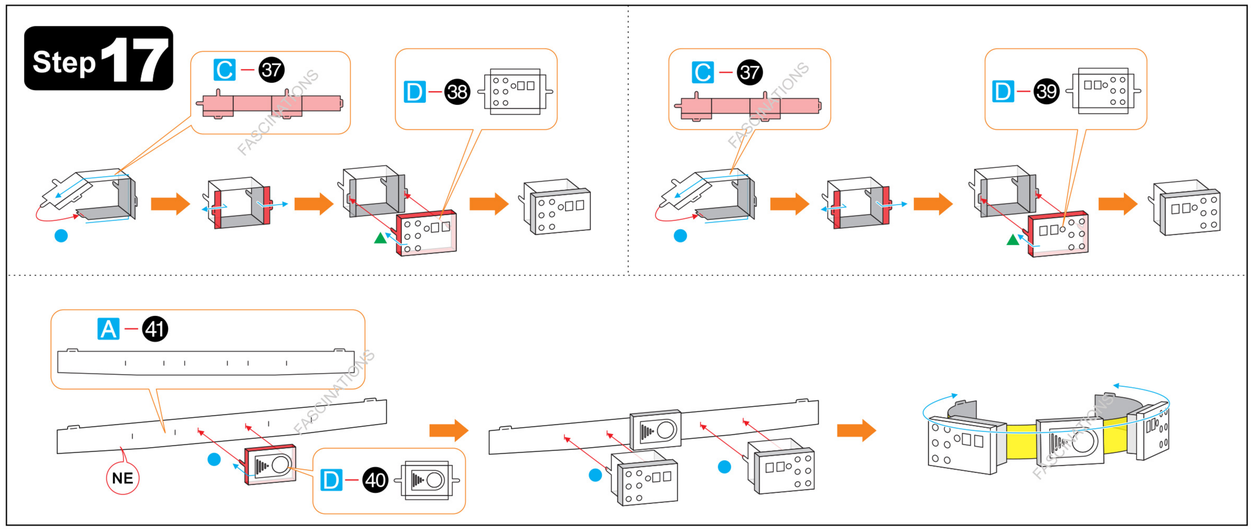

Step 18

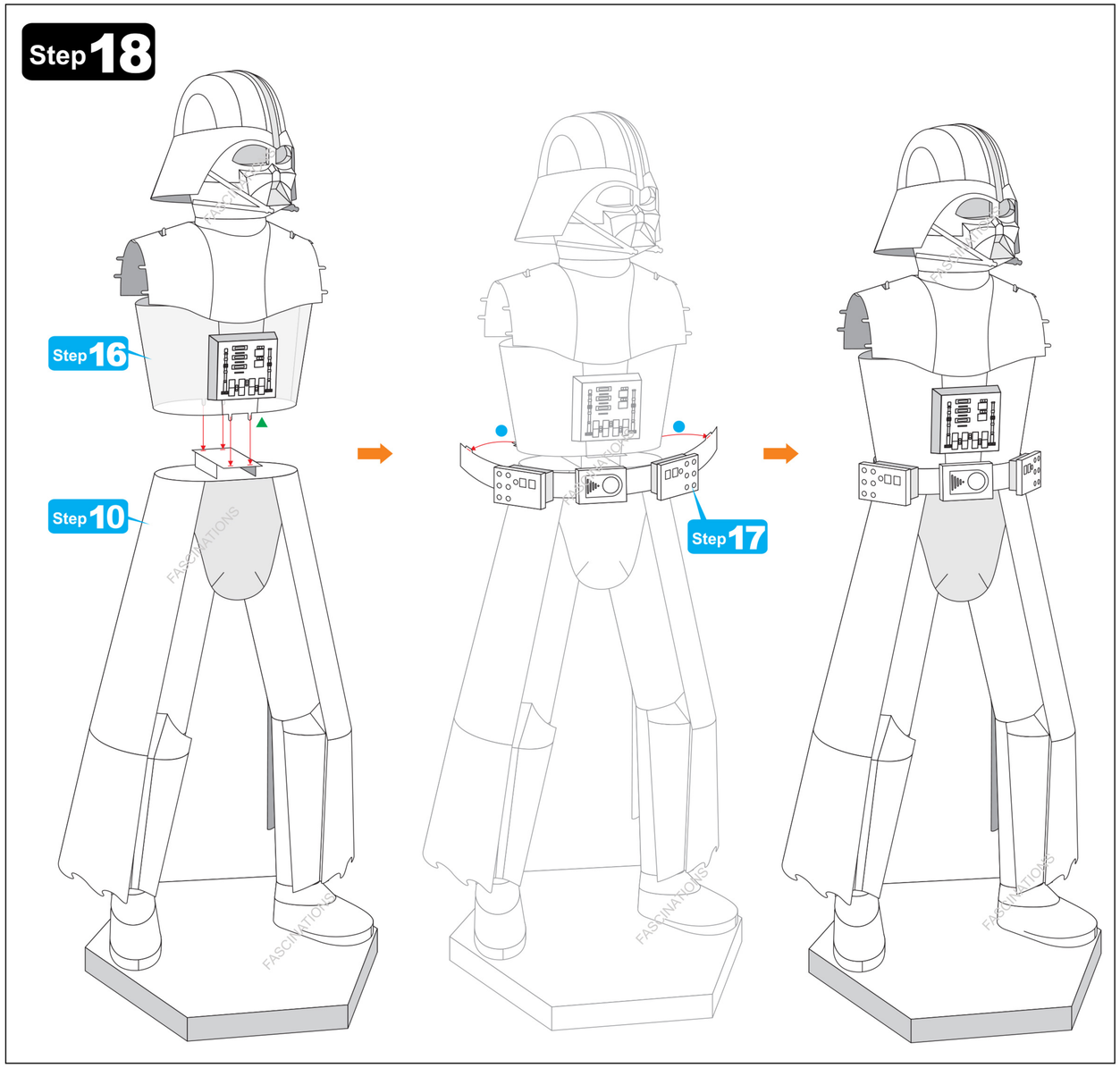

Step 19

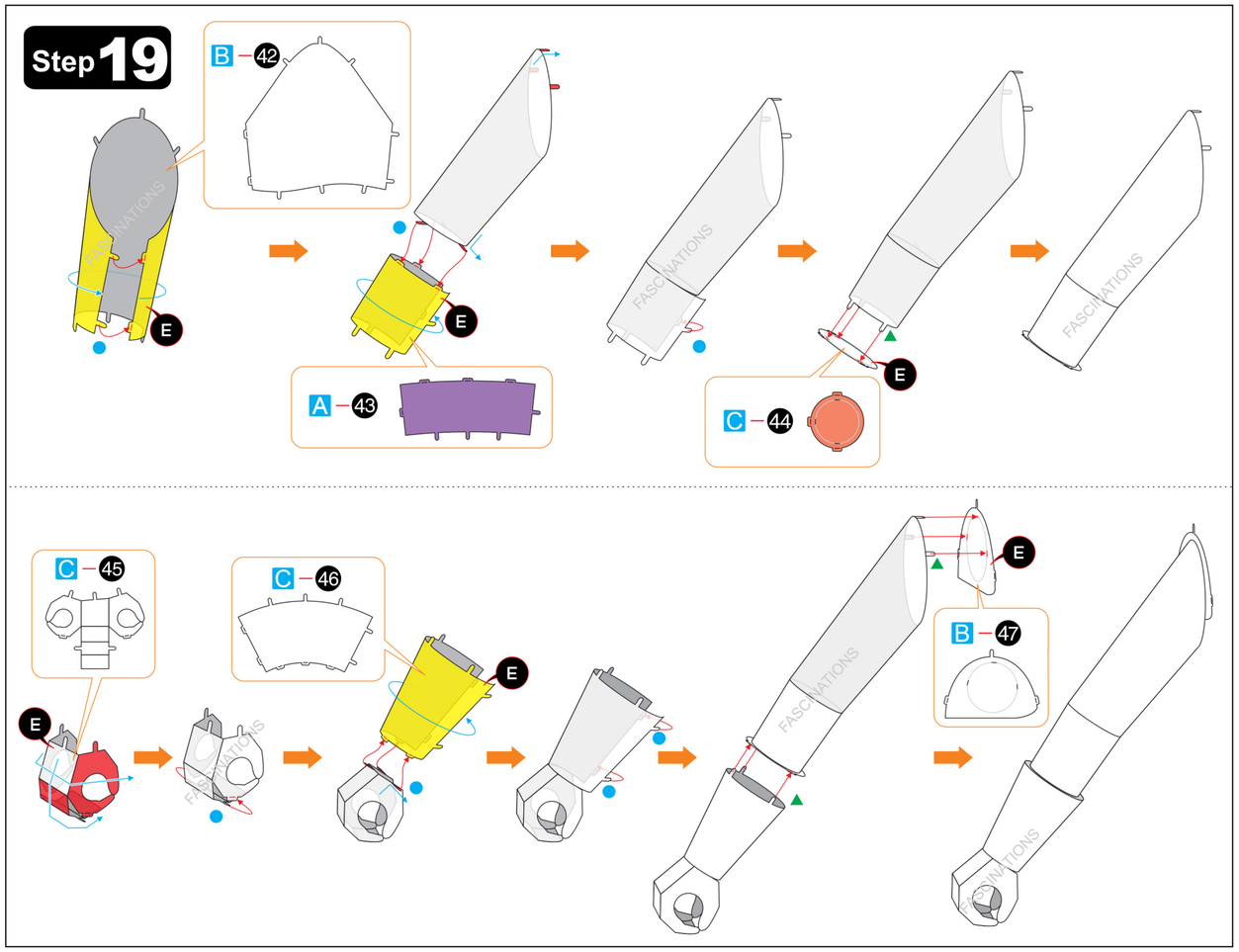

Step 20

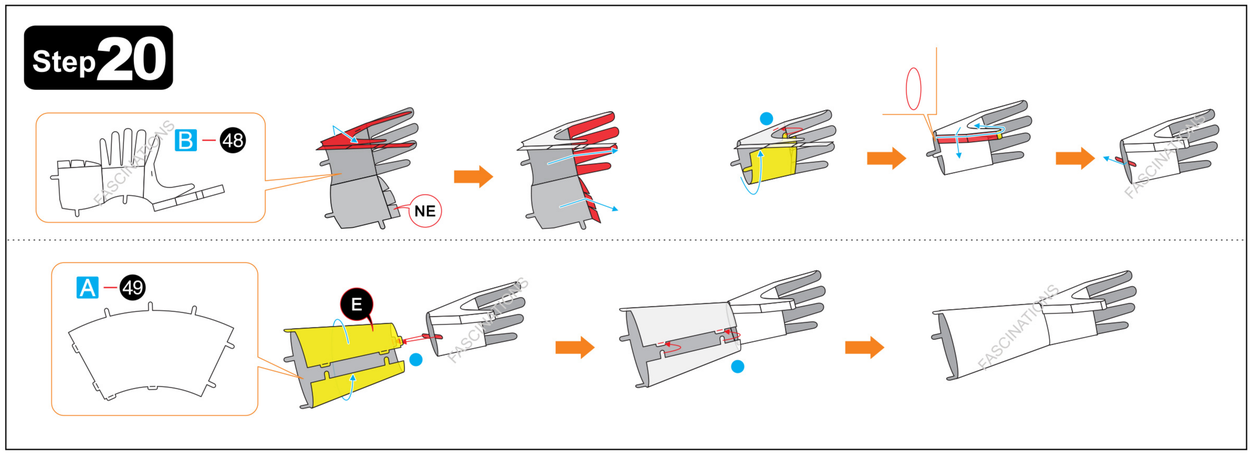

Step 21

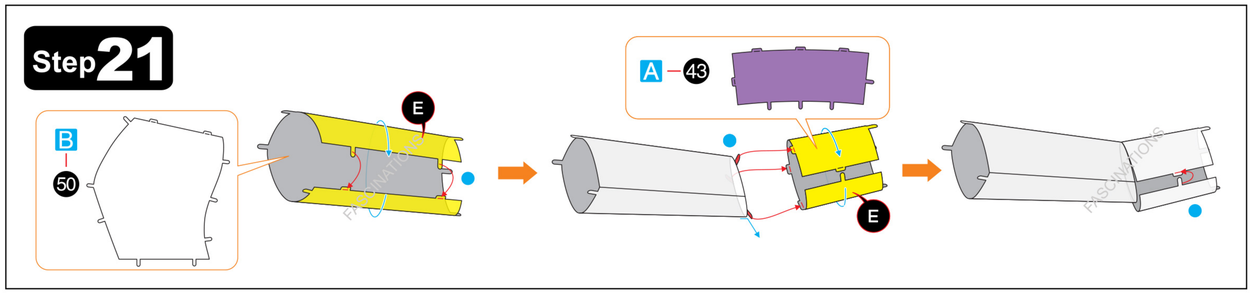

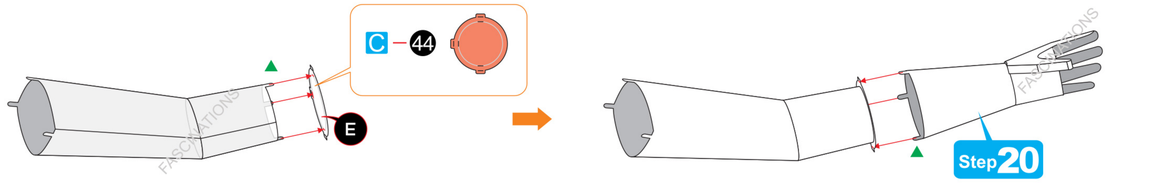

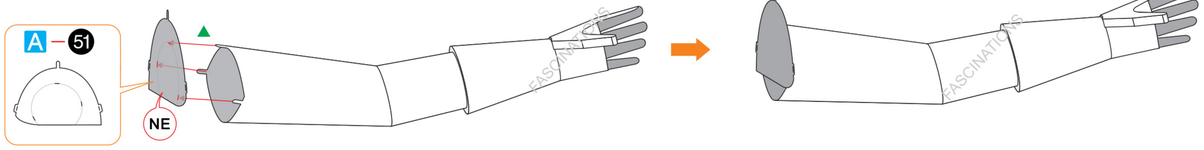

Step 22

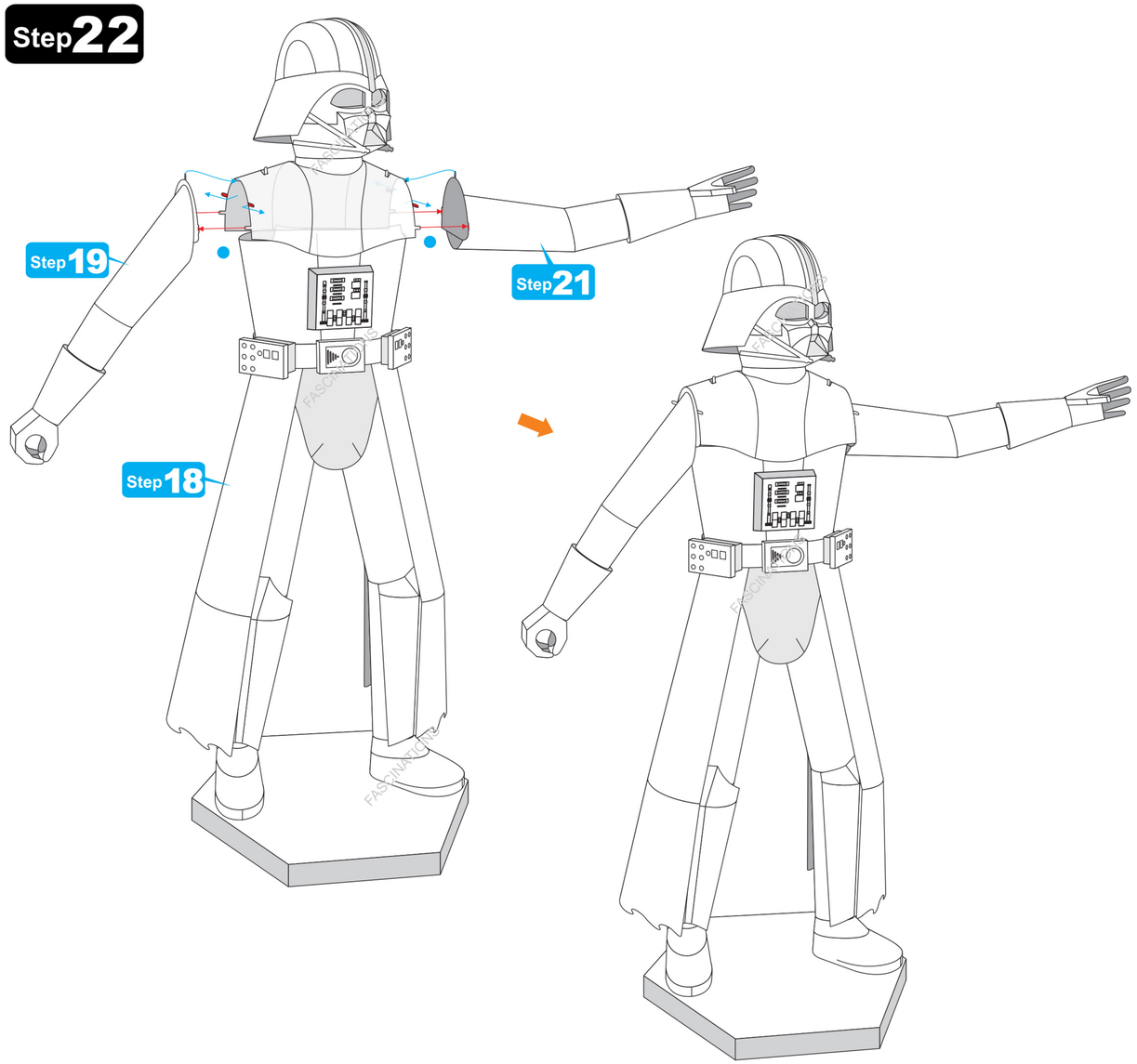

Step 23

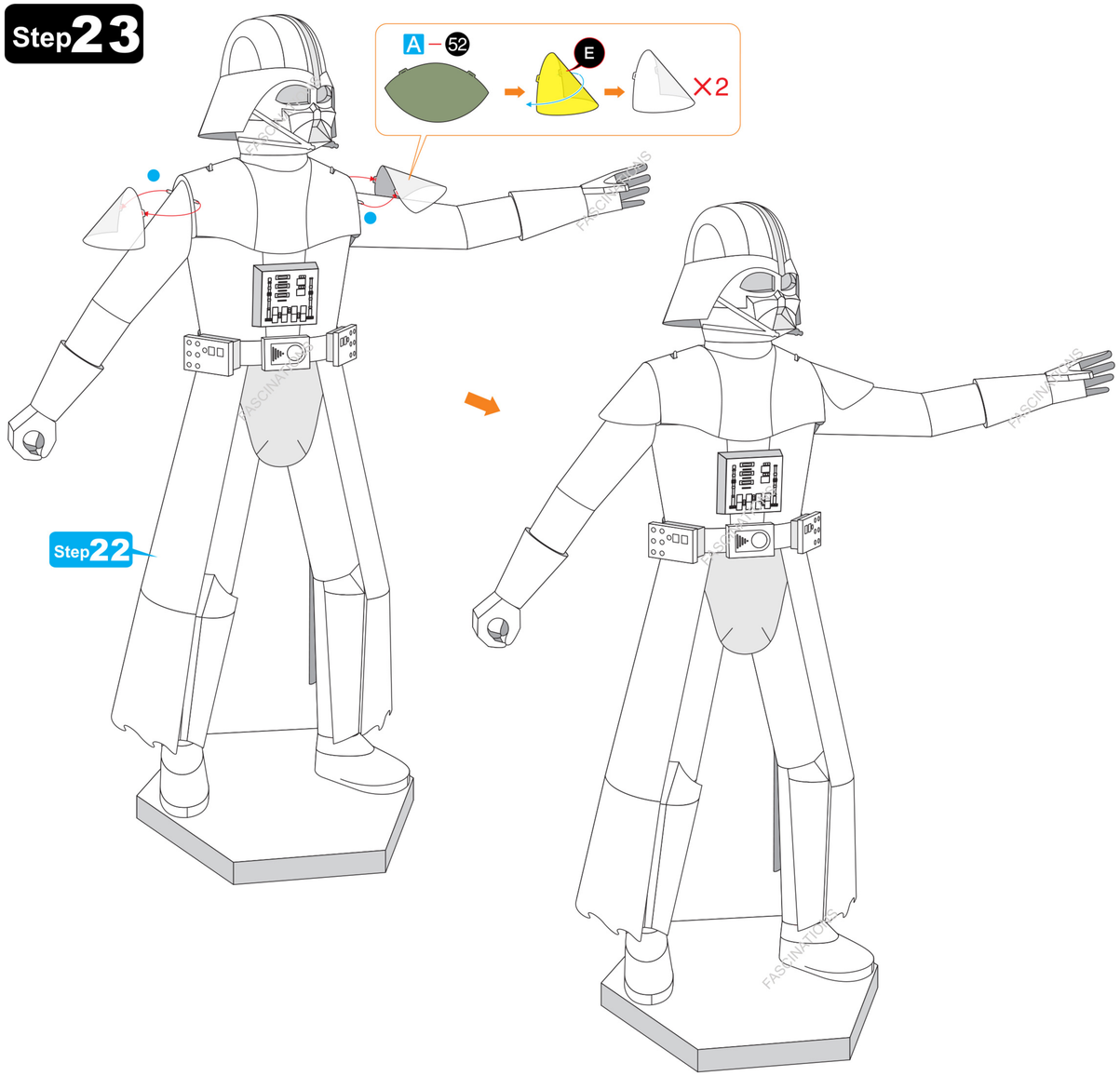

Step 24

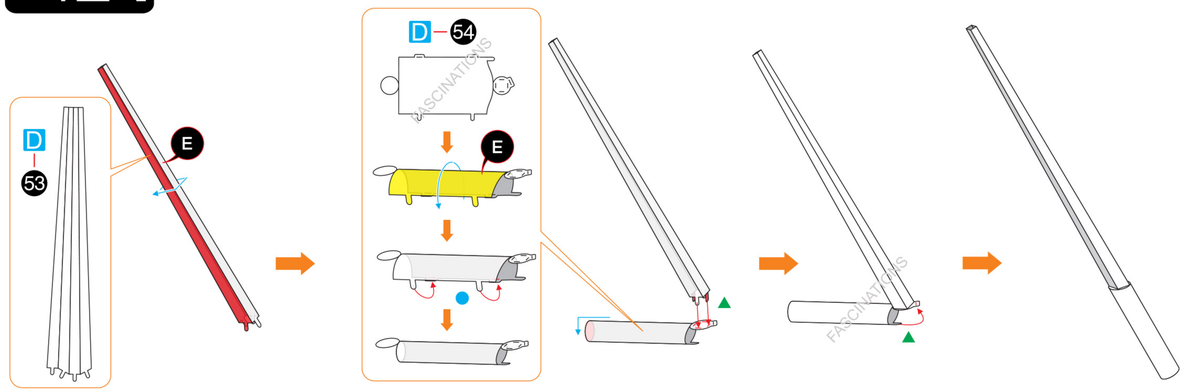

Step 25

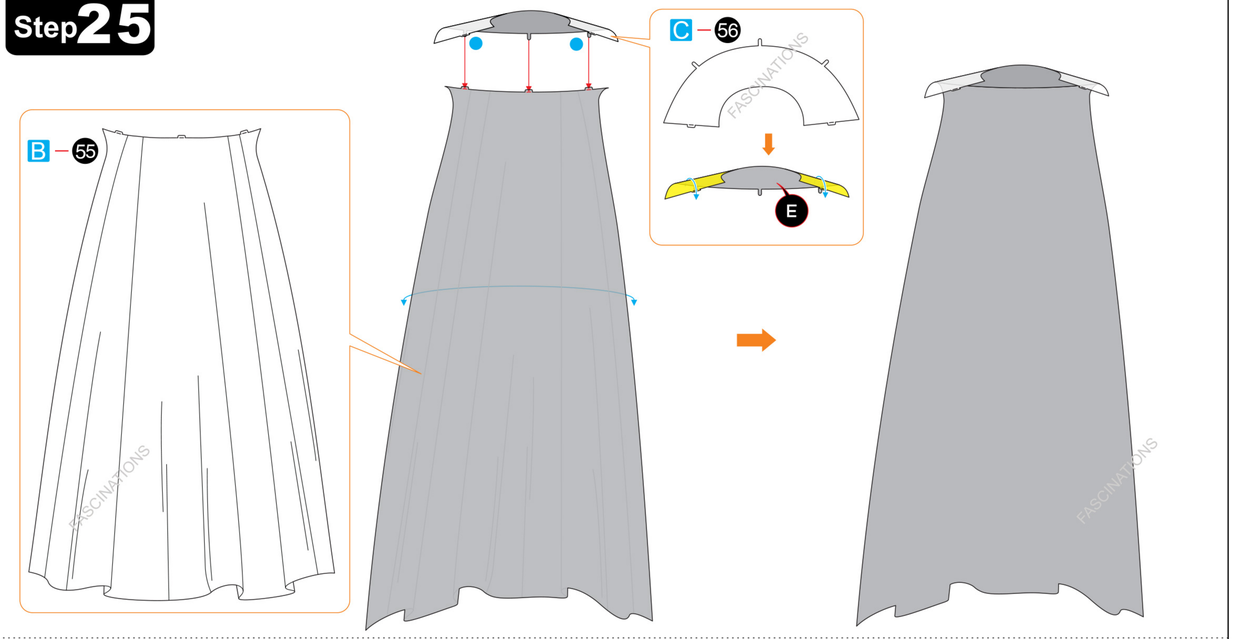

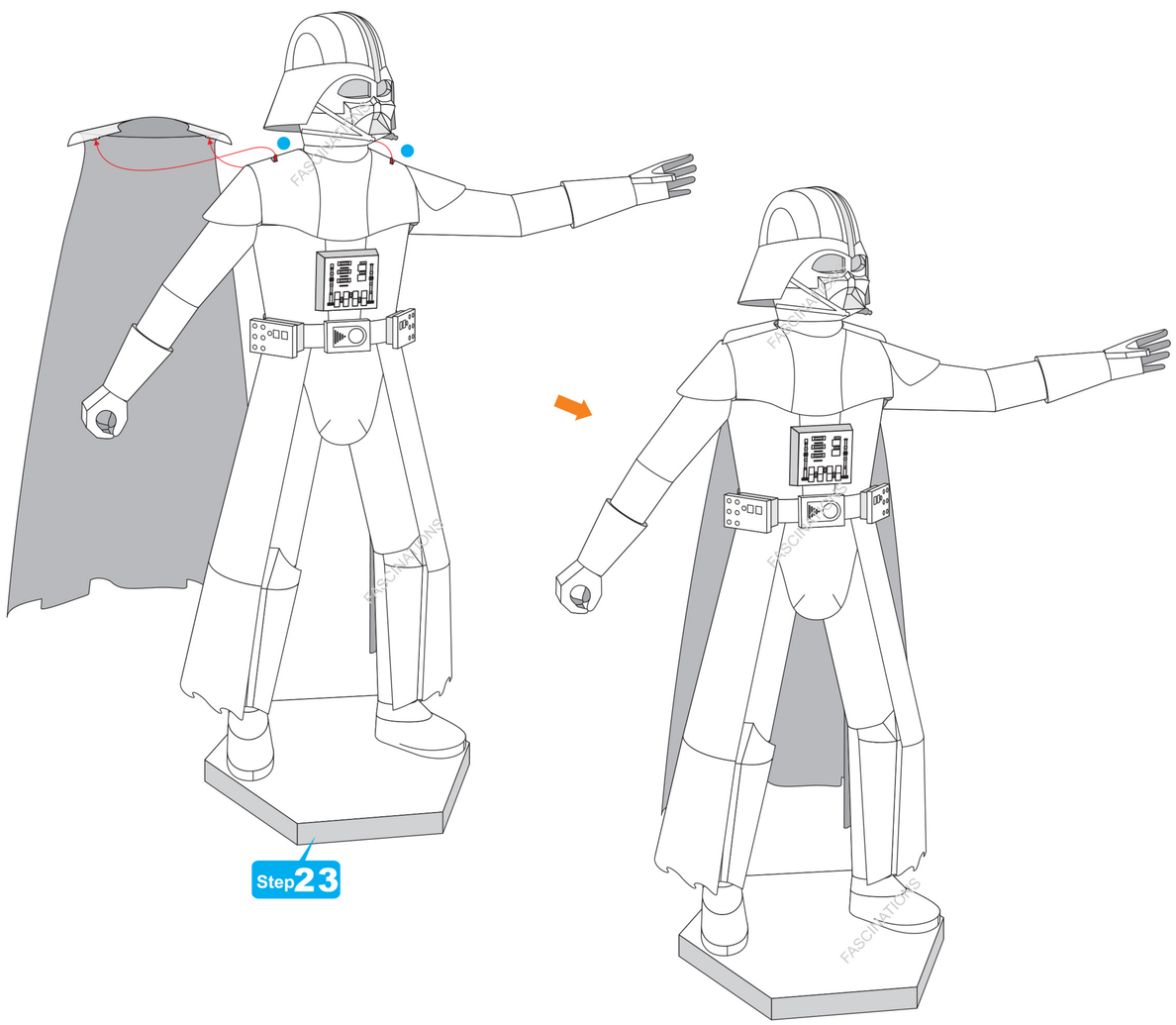

Step 26

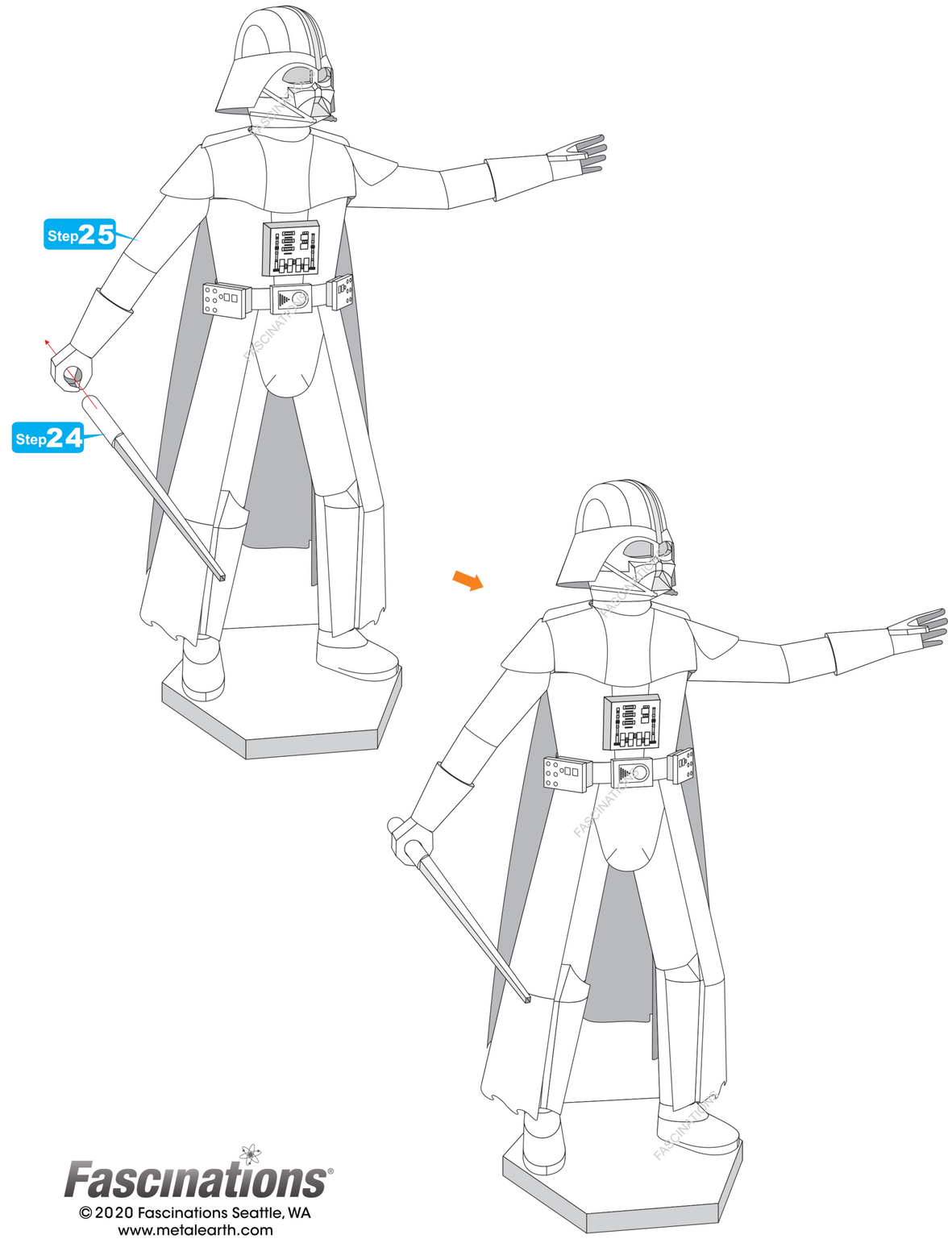

Fascinations®
© 2020 Fascinations Seattle, WA
www.metalearth.com